PLAY HOUSES

4.3 CINDERELLA

3 - 7

7 users

4 x 1.9 x 3 m

7 x 4.9

<1 m

29 m²

ca. 900 kg

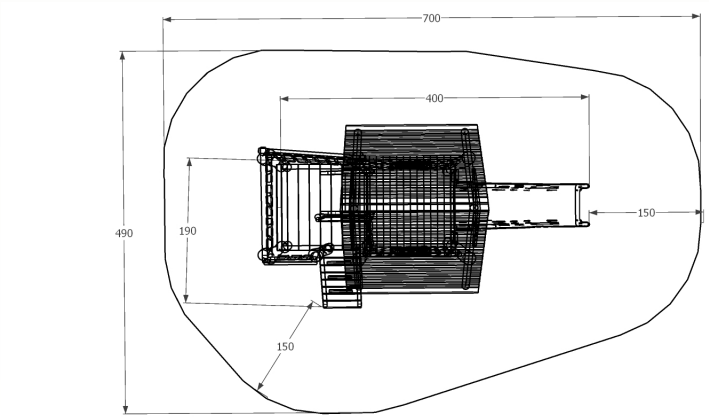

Components:

- 2 platforms play house
- Platforms 1 x 1 m, h. 0.4 / 1 m
- Entering platform 0.5 x 0.9 m
- Stairs
- Laminate slide h. 1 m

(can be upon request replaced by a stainless steel slide (additional fee))

XPERIAMUS FAMILY TOGETHER

sales@xperiamus.com +421 905 522 133 www.xperiamus.com

XPERIAMUS, s. r. o., Budca 686, 96233, Slovakia; Business ID: 50246151; VAT: SK2120248251; TAX ID: 2120248251